XML Standards

DisplayML

SWARCO I First in Traffic Solutions.

TABLE OF CONTENTS

1 Introduction

1.1 Scope

This document outlines a standard open protocol DisplayML for displaying output on display devices.

1.2 Target Audience

The audience for this document includes designers and developers implementing the described interface.

1.3 Updates of this document

Updates of this document are only allowed with the approval of the owner of the document.

1.4 Glossary

XML	Extensible Markup Language
XML Schema	XML Schemas are documents that are used to define and validate the content and structure of XML data. XML Schemas use XML syntax.
XSD	XML Schema definition language. XSD is based on the W3C 2001 Recommendation specifications for Datatypes and for Structures.
DTD	Document Type Definition
ISO	International Standards Organisation
SOAP	Simple Object Access Protocol
UTC	Universal Time Coordinated (also known as GMT-Greenwich MeanTime)
VMS	Variable Message Sign
WSDL	Web Service Description Language

2 Management summary

2.1 Overview

This document specifies the interface between Swarco Mizar's systems and display devices (primarily VMS signs but other devices will be supported).

The interface between systems and display devices has historically required encoded character strings which whilst functional can lead to complexity in creation and debugging.

This document describes a standard protocol based on XML messages which provides a number of distinct advantages over alternative methods;

- Human readable format
- Open; XML may be used to exchange data with other users and programs in a platform-independent way
- Easy to validate using XML-Schema
- Extensible
- Self-describing
- Extensive tool support

2.2 Functionality

This protocol is applicable to numerous display devices using various technologies such as LED, LCD, Bi-stable Magnetic, VGA etc. The protocol can be implemented in different levels depending on the type of display:
Typical display functions;

- Alphanumeric display
- Alphanumeric display with scrolling text
- Alphanumeric display with proportional text
- Graphical display

2.3 XML interface overview

A controlling PC or device will build the XML document and send it via the preferred communications protocol (for example HTTP) to the display device.

The device will then parse the message and carry out the required function.

Once processed, the display device will respond with a confirmation message (i.e. request/response model).

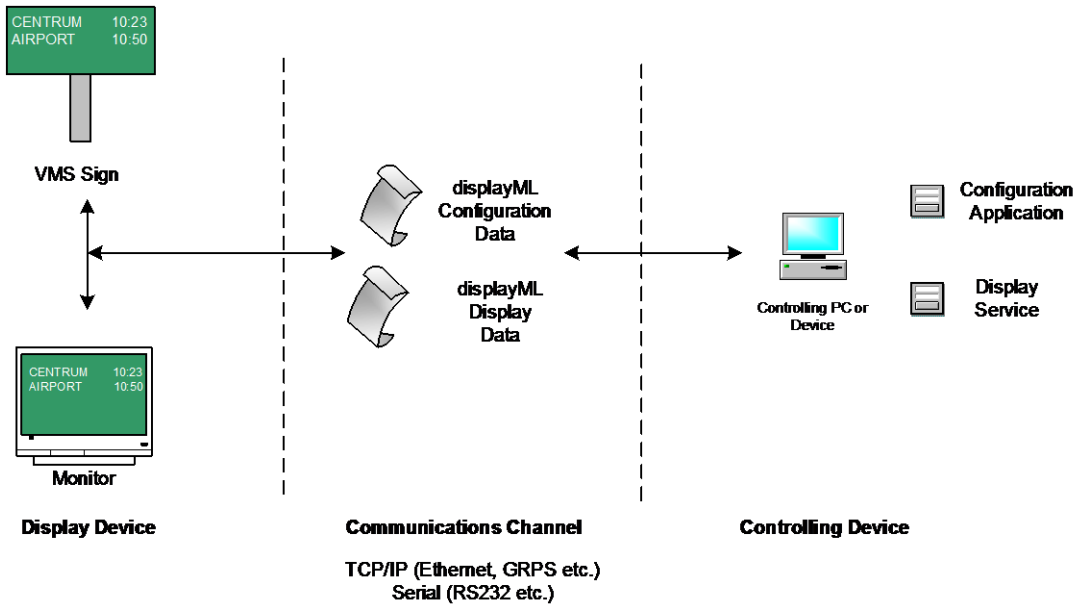

The display device will likely run some type of embedded software (e.g. Embedded Linux within a display devices) to store configuration data and communicate directly to the display unit.

3 Request and response messages

DisplayMLRequest messages are sent from the controller to the display device and DisplayMLResponse message is what the display device sends back as a response. Every message will be sent as a XML document – there is currently no compatibility with other protocols (however conversion to other formats should be relatively simple).

3.1 Request and response

All DisplayMLRequest messages have a corresponding DisplayMLResponse message.

Request message	Description	Corresponding response message
clockSync	Set the internal clock within the display	**clockSyncResponse**
fileTransfer	Transfer an image, font or software	**fileTransferResponse**
getDisplay	Returns the data currently used	**getDisplayResponse**
getParameters	Get configuration parameters from the device	**getParametersResponse**
getStatus	Get the device status	**getStatusResponse**
hardwareTest	Perform a test in the device	**hardwareTestResponse**
setDisplay	Sends data to a device	**setDisplayResponse**
setParameters	Set configuration parameter on the device	**setParametersResponse**
templateTransfer	Transfer templates, Delete specific template or delete all templates	**templateTransferResponse**

3.2 Request Message Layout

Request messages will confirm to the following standard.

Name	Opt.	Type	Format	Description
displayMLRequest		E	N/A	Root Element
Xmlns	N	A	string	Should always be http://www.peek.se/DisplayML/
Version	N	A	decimal	The DisplayML protocol version
DateTime	N	A	dateTime CCYY-MM-DDThh:mm:ss	Message send time
DeviceID	Y	A	string	Device Identifier
ClientID	Y	A	string	Client Identifier (i.e. calling application or device)
BODY				Body of XML document relevant to message

Request message

```
<displayMLRequest xmlns="http://www.peek.se/DisplayML/" version="1.12"
   dateTime="2001-12-17T09:30:47-05:00">

      <!—BODY WILL BE INSERTED HERE —>

</displayMLRequest >
```

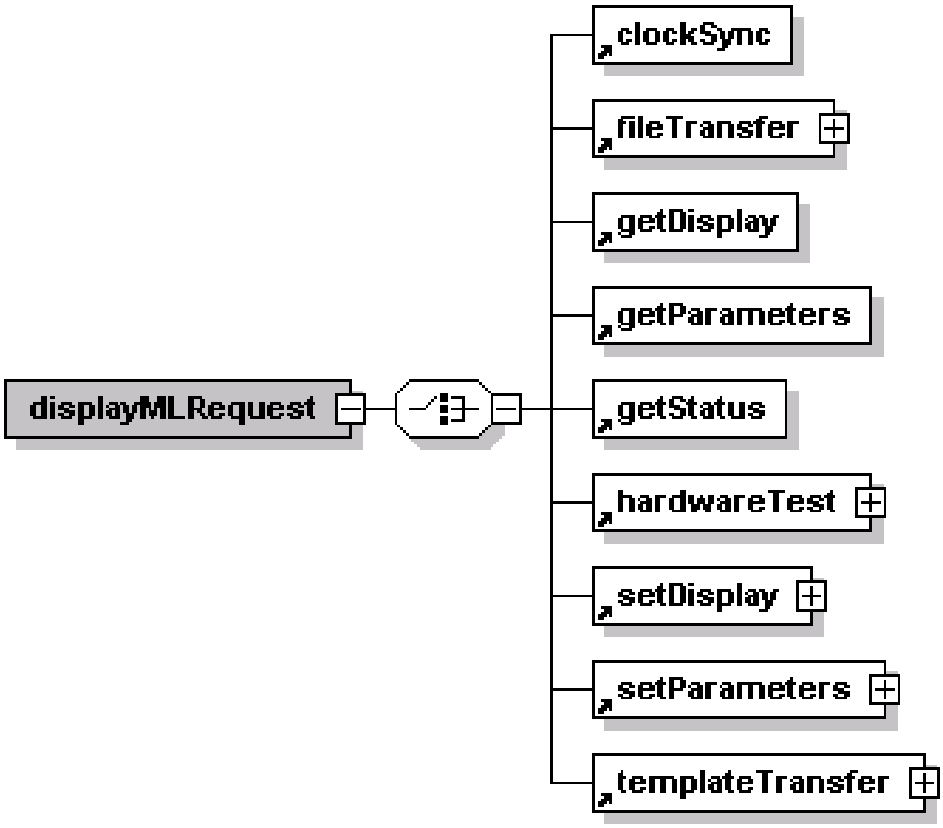

3.3 Response Message Layout

Response messages must confirm to the following standard;

Name	Opt.	Type	Format	Description
displayMLResponse		E	N/A	Root Element
xmlns	N	A	string	Should always be http://www.peek.se/DisplayML/
version	N	A	decimal	The DisplayML protocol version
dateTime	N	A	dateTime CCYY-MM-DDThh:mm:ss	Message send time
deviceID	Y	A	string	Device Identifier
clientID	Y	A	string	Client Identifier (i.e. calling application or device)
BODY				Body of XML document relevant to message

Response message

```
<displayMLResponse xmlns="http://www.peek.se/DisplayML/" version="1.12"
   dateTime="2001-12-17T09:30:47-05:00">

      <!—BODY WILL BE INSERTED HERE —>

</displayMLResponse>
```

Every request type in a DisplayMLRequest message has a counterpart in the DisplayMLResponse message.

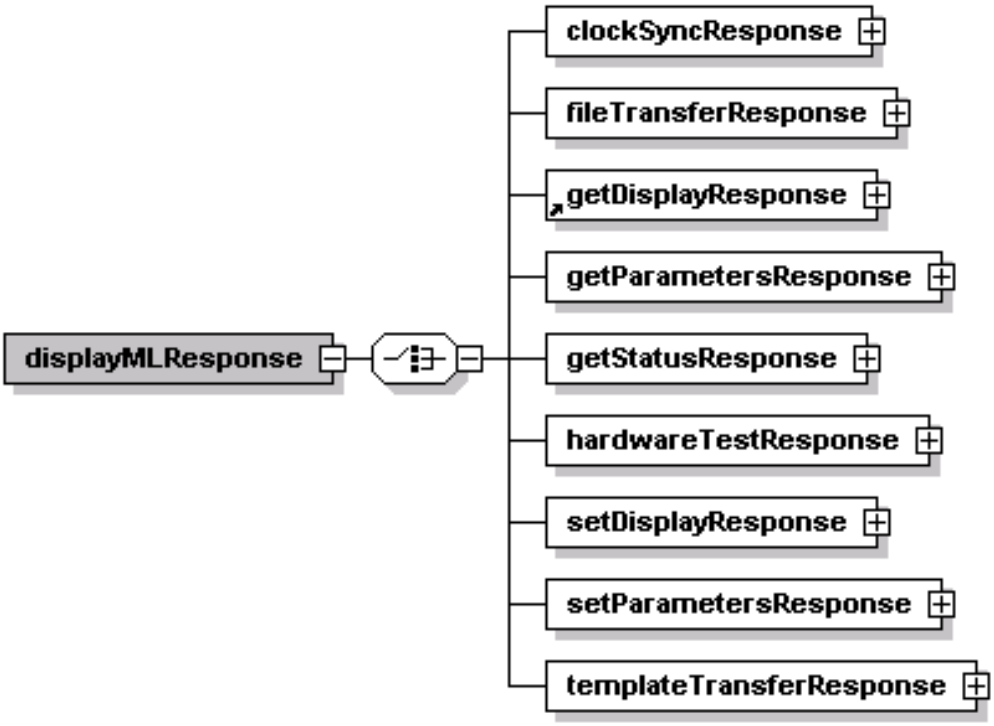

3.3.1 All response messages should include either “OK” or “faults”.

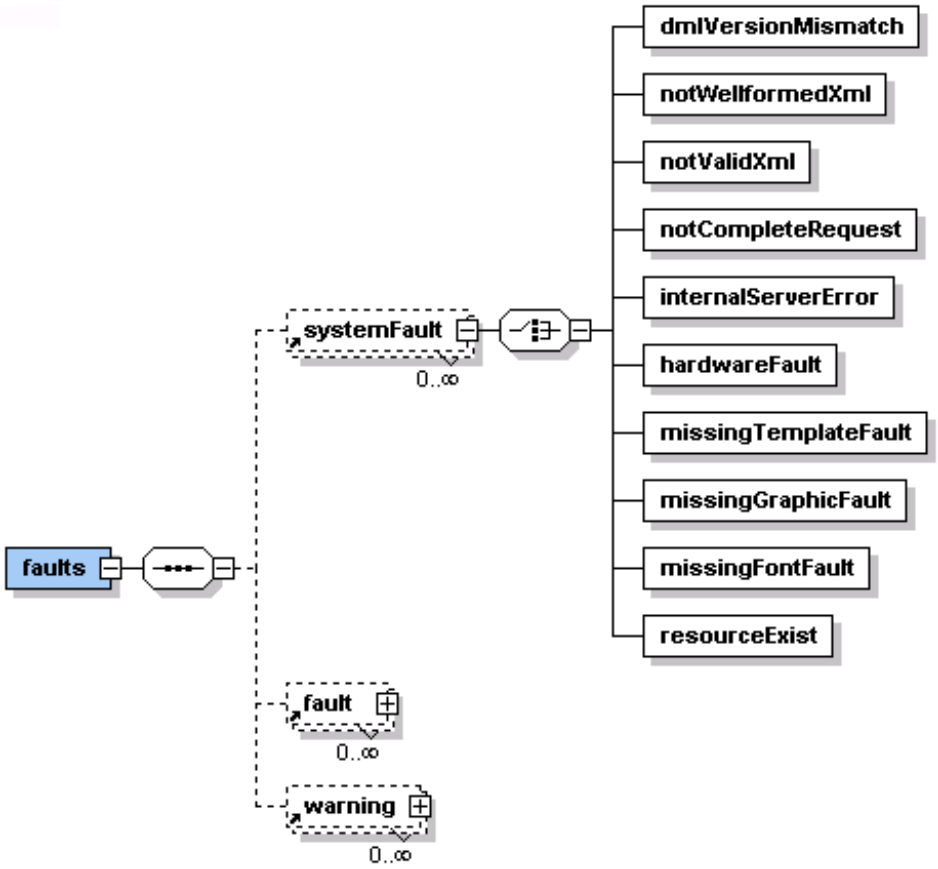

3.3.2 Elements description

Name	Opt.	Type	Format	Description
OK		E	N/A	Empty element. Sent as a response when the request have been handled without errors.
systemFault		E	Element	Predefined system faults.
fault		E	Elements	
warning		E	Elements	
faultCode		E	string	Free to define. Should be used for critical faults.
warningCode		E	string	Free to define. Should be used for non critical faults.
message	Y	E	string	Optional extra information.

3.3.3 systemFault elements

The systemFault elements and their attributes.

Name	Opt.	Type	Format	Description
dmlVersionMismatch		E		
description	Y	A	string	Extra information back to client.
notWellformedXml		E		
description	Y	A	string	Extra information back to client.
notValidXml		E		
description	Y	A	string	Extra information back to client.
notCompleteRequest		E		
description	Y	A	string	Extra information back to client.
internalServerError		E		
description	Y	A	string	Extra information back to client.
hardwareFault		E		
description	Y	A	string	Extra information back to client.
missingTemplateFault		E		
description	Y	A	string	Extra information back to client.
name	N	A	string	The name of the missing template
missingGraphicFault		E		
description	Y	A	string	Extra information back to client.
name	N	A	string	The name of the missing graphic.
missingFontFault		E		
description	Y	A	string	Extra information back to client.
name	N	A	string	The name of the missing graphic.
size	N	A	nonNegativeInteger	The size of the missing font.
resourceExist		E		Should be sent if a fileTransfer message is sent with the attribute replace set to false and there is a resource with this name already.
name	N	A	string	Resource name.
description	Y	A	string	Extra information back to client.

3.3.4 systemFault examples

Example: notCompleteRequest

```
<displayMLResponse xmlns="http://www.peek.se/DisplayML/" version="1.12"
   dateTime="2001-12-17T09:30:47-05:00">
      <setDisplayResponse>
         <faults>
            <systemFault>
               <notCompleteRequest description=" End root tag is not received "/>
            </systemFault>
         </faults>
      </setDisplayResponse>
</displayMLResponse>
```

Example: missingFontFault

```
<displayMLResponse xmlns="http://www.peek.se/DisplayML/" version="1.12"
   dateTime="2001-12-17T09:30:47-05:00">
      <setDisplayResponse>
         <faults>
            <systemFault>
               <missingFontFault name="arial" size="18"/>
            </systemFault>
         </faults>
      </setDisplayResponse>
</displayMLResponse>
```

Example: missingTemplateFault and missingFontFault

```
<displayMLResponse xmlns="http://www.peek.se/DisplayML/" version="1.12"
   dateTime="2001-12-17T09:30:47-05:00">
      <setDisplayResponse>
         <faults>
            <systemFault>
               <missingTemplateFault name="templateAlfa"/>
            </systemFault>
            <systemFault>
               <missingFontFault name="arial" size="18"/>
            </systemFault>
         </faults>
      </setDisplayResponse>
</displayMLResponse>
```

4 The messages

4.1 Clock Synchronisation Message

The ‘Clock Synchronisation’ message is used to synchronise the display device internal clock. The message will be sent from the controller to the device when Clock date/time is to be set.

4.1.1 clockSync

The message will consist of the following information;

Name	Opt.	Type	Format	Description
clockSync		E	N/A	Main Element
dateTime		A	DateTime, CCYY-MM-DDThh:mm:ss	W3C XML Schema predefined datatype

Sample ‘ClockSync’ Request message

```
<displayMLRequest xmlns="http://www.peek.se/DisplayML/" version="1.12"
   dateTime="2001-12-17T09:30:47">
      <clockSync dateTime="2001-12-17T09:30:47"/>
</displayMLRequest>
```

4.1.2 clockSyncResponse

The response message will consist of the following information;

Name	Opt.	Type	Format	Description
clockSyncResponse		E	ELEMENT	Main Element.
OK		E	ELEMENT	Sent if no error occured.
faults		E	ELEMENT	Sent if error occured.

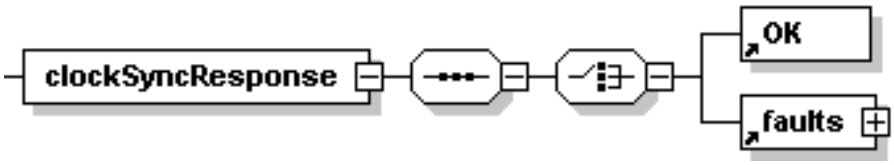


```
<displayMLResponse xmlns="http://www.peek.se/DisplayML/" version="1.12"
   dateTime="2001-12-17T09:30:47">
      <clockSyncResponse>
            <OK/>
      </clockSyncResponse>
</displayMLResponse>
```

4.2 File transfer message

The ‘File Transfer’ message is used to update files to the display unit.
The message will be sent from the controller to the display device when;

- Graphics are to be transferred to the display unit for future usage
- Graphics are to be removed from the display unit
- Fonts are to be transferred to the display unit for future usage
- Fonts are to be removed from the display unit

4.2.1 fileTransfer

The message will consist of the following information;

Name	Opt.	Type	Format	Description
fileTransfer		E	N/A	Main Element
addFile		E	ELEMENT	Add an image to the data store
	N	A	string	Filename
	N	A	string enumeration PCX, BMP, GIF, JPG, XPM, font (PGF).	File format
replace	N	A	boolean	Indicate if a old file with the same name should be resplaced.
FileDataBase64Binary		E	base64Binary	File Content Typer base64 encoding binary
FileDataCDATA		E	AnySimpleType (CDATA)	Everything inside a CDATA section is ignored by the parser. Templates can be sent with CDATA.
fileReference		E	N/A	Used when a new file is available.
uri	N	A	anyURI	Attribute holds information of where the new file should be collected.
replace	N	A	boolean	Indicate if a old file with the same name should be resplaced.
software		E	ELEMENT	Sends new software to Display
name	N	A	string	The name of the software.
replace	N	A	boolean	Indicate if a old software with the same name should be resplaced.
softwareReference		E	N/A	Used when a new software is available.

replace	N	A	boolean	Indicate if a old software with the same name should be resplaced.
uri	N	A	anyURI	Attribute holds information of where the new software should be collected.
removeFile		E	ELEMENT	Remove a file from the data store
	N	A	string	Filename

Important: removeFile must always be done before addFile is done, if both are sent in the same message.

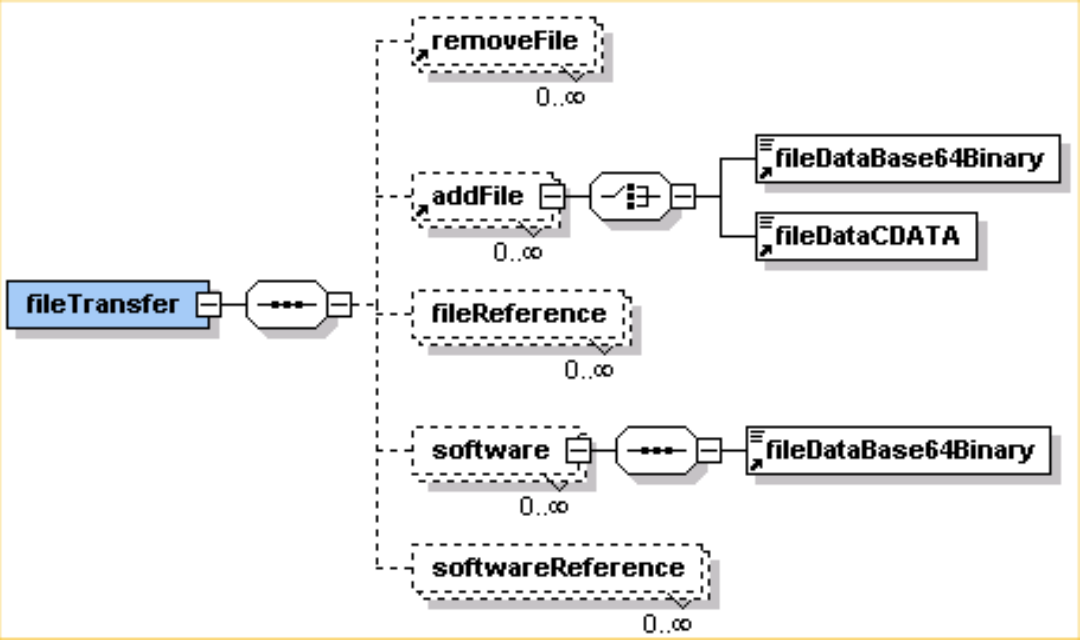

Sample 'fileTransfer' Request message

```
<displayMLRequest xmlns="http://www.peek.se/DisplayML/" version="1.12"
dateTime="2001-12-
   17T09:30:47-05:00">
      <fileTransfer>
            <softwareReference uri="http://example.org/newSoftware.exe"
replace="true"/>
      </fileTransfer>
</displayMLRequest>
```

4.2.2 fileTransferResponse

The response message will consist of the following information;

Name	Opt.	Type	Format	Description

fileTransferResponse	E	ELEMENT	Main Element
faults	E	ELEMENT	Faults Element. Sent if error occured.
OK	E	ELEMENT	Sent if no error occured.

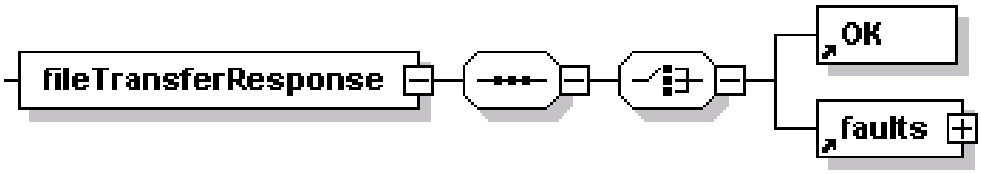

Sample fileTransferResponse message

```
<displayMLResponse version="1.12" xmlns=http://www.peek.se/DisplayML/
   dateTime="2003-10-10T13:13:08">
      <fileTransferResponse>
         <OK/>
      </fileTransferResponse >
</displayMLResponse>
```

4.3 Get display message

The ‘GetDisplay‘ message returns the currently displayed text (i.e. what is displayed on the display device using the setDisplay document) and the currently used template.

4.3.1 getDisplay

Sample ‘getDisplay’ Request message

```
<displayMLRequest xmlns="http://www.peek.se/DisplayML/" version="1.12"
   dateTime="2001-12-17T09:30:47">
            <getDisplay/>
</displayMLRequest>
```

4.3.2 getDisplayResponse

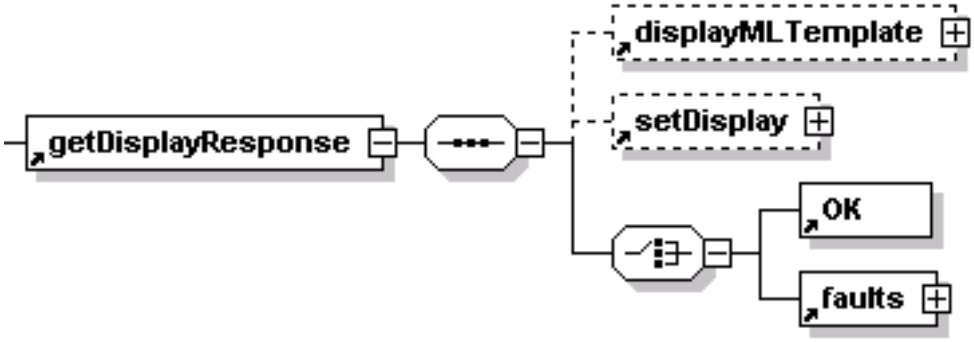

Sample getDisplayResponse message
The currently used template and viewed data are returned.

```
<displayMLResponse xmlns="http://www.peek.se/DisplayML/" version="1.12"
   dateTime="2001-12-17T09:30:47">
      <getDisplayResponse>
         <addTemplate name="templateBeta">
            <region name="title" top="2" left="3" height="2" width="14" scale="char"/>
            <region name="center" top="5" left="5" height="5" width="20" scale="char"/>
         </addTemplate>
         <setDisplay template="templateBeta ">
             <textField region="title" align="center">
                Departure<time format="String"/>
             </textField>
          </setDisplay>
          <OK/>
      </getDisplayResponse>
</displayMLResponse>
```

4.3.3 Get Parameters message

The ‘Get Parameters’ message is used to retrieve parameter information about the display device.

The message will be sent from the controller to the display device when parameter information is required.

4.3.4 getParameters

The request message will consist of the following information;

Name	Opt.	Type	Format	Description
getParameters		E	N/A	Main Element

Sample ‘get Parameters’ Request Message

```
<displayMLRequest xmlns="http://www.peek.se/DisplayML/" version="1.12"
   dateTime="2001-12-17T09:30:47+01:00">
      <getParameters/>
</displayMLRequest>
```

4.3.5 getParametersResponse

The response message will consist of the following information;

Name	Opt.	Type	Format	Description
getParameters	N	E	N/A	Main Element
parameter	N	E	N/A	Element
name	N	E	string	Parameter name
value	N	E	string	Parameter value

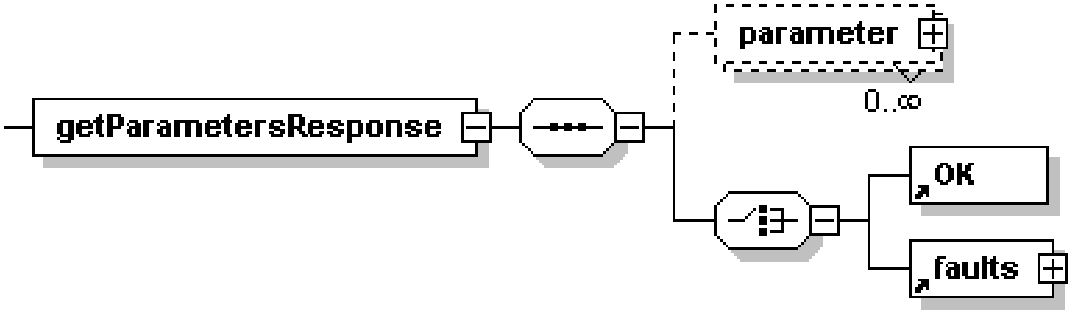

```
<displayMLResponse xmlns="http://www.peek.se/DisplayML/" version="1.12"
   dateTime="2001-12-17T09:30:47-05:00">
      <getParametersResponse>
            <parameter>
                  <name>Manufacturer</name>
                  <value>PEEK</value>
            </parameter>
            <parameter>
                  <name>Model</name>
                  <value>Display01</value>
            </parameter>
      </getParameters>
</ getParametersResponse >
```

4.4 Get Status message

The ‘Status’ message is used to retrieve information about the display device.
The message will be sent from the controller to the display device when;

- Status/Fault information is required.
- Manufacturer and make of device is required.

4.4.1 getStatus

The request message will consist of the following information;

Name	Opt.	Type	Format	Description
getStatus	N	E	N/A	Main Element

Sample ‘getStatus’ Request Message

```
<displayMLRequest xmlns="http://www.peek.se/DisplayML/" version="1.12"
   dateTime="2001-12-17T09:30:47">
   <getStatus/>
</displayMLRequest>
```

4.4.2 getStatusResponse

The response message will consist of the following information;

Name	Opt.	Type	Format	Description
getStatusResponse		E	N/A	Main Element
systemInformation		E	ELEMENT	List of Status Items
item		E	ELEMENT	Status Item
name		E	string	Status Name

value	E	string	Value of Status

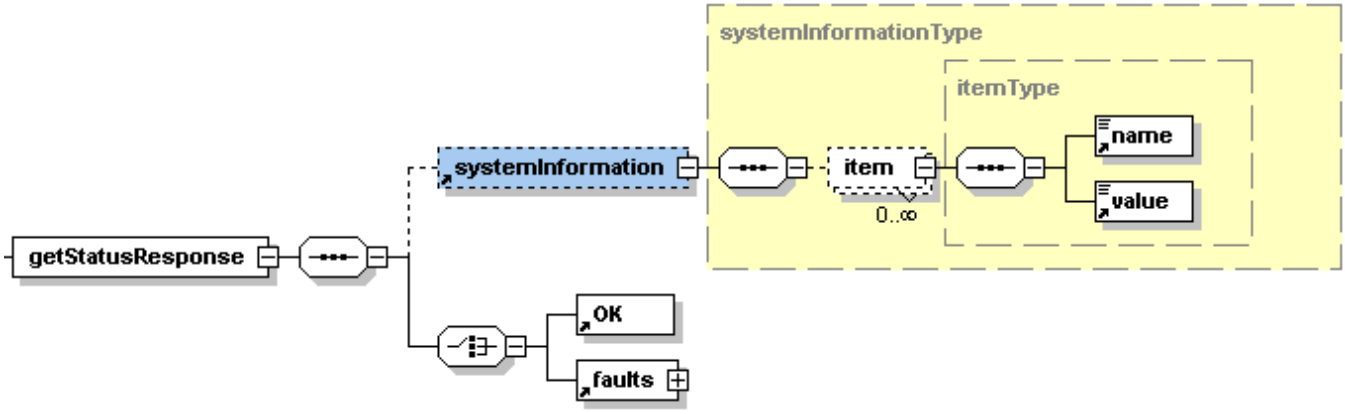

OK	E	ELEMENT	
faults	E	ELEMENT	Fault Group.

```
<displayMLResponse xmlns="http://www.peek.se/DisplayML/" version="1.12"
   dateTime="2001-12-17T09:30:47">
      <getStatusResponse>
            <systemInformation>
                  <item>
                        <name>Manufacturer</name>
                        <value>PEEK</value>
                  </item>
                  <item>
                        <name>Version</name>
                        <value>1.0.0</value>
                  </item>
            </systemInformation>
             <OK/>
      </ getStatusResponse >
</displayMLResponse>
```

Note: Parameters are specific to the device capabilities but Manufacturer and Model must be supported as standard.

4.5 Hardware Test Message

The 'Hardware Test' message is used to perform a system test on the display (i.e. run self tests to ensure operation is within acceptable parameters).

The message will be sent from the controller to the display device when a hardware test is required.

4.5.1 hardwareTest

The message will consist of the following information;

Name	Opt.	Type	Format	Description
hardwareTest		E	N/A	Main Element
testCase		E	N/A	Test Case Number
testCaseID		A	String	Name of Test case
duration		A	NonNegativeInteger	Duration in seconds to run the test.

Note: Test Case ID refers to the manufacturer provided tests.

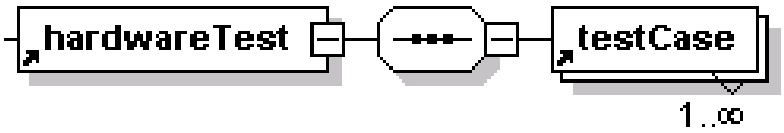

Sample 'hardwareTest' Request Message

```
<displayMLRequest xmlns="http://www.peek.se/DisplayML/" version="1.12"
   dateTime="2001-12-17T09:30:47">
      <hardwareTest>
         <testCase testCaseID="FlashDisplay" duration="20"/>
         <testCase testCaseID="PixelText" duration="20"/>
      </hardwareTest>
</displayMLRequest>
```

4.5.2 hardwareTestResponse

The response message will consist of the following information;

Name	Opt.	Type	Format	Description
hardwareTestResponse		E	ELEMENT	Main Element
faults		E	ELEMENT	Faults Element. Sent if error occured.
OK		E	ELEMENT	Sent if no error occured.

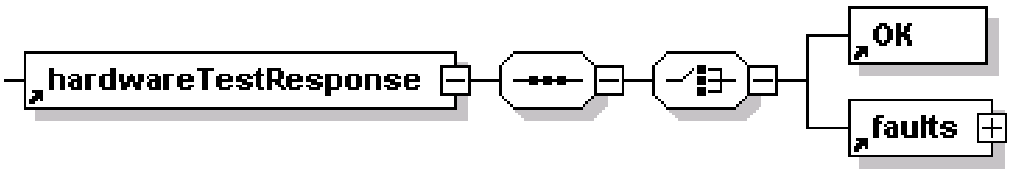

Sample hardwareTestResponse message

```
<displayMLResponse version="1.12" xmlns=http://www.peek.se/DisplayML/
   dateTime="2003-10-10T13:13:08">
      <hardwareTestResponse>
         <OK/>
      </hardwareTestResponse>
</displayMLResponse>
```

4.6 Set display message

The ‘SetDisplay‘ message is used to update the output displayed on the device.
The message will be sent from the controller to the display device when;

- Text is to be displayed
- Graphics is to be displayed

4.6.1 SetDisplay

The setDisplay message will consist of the following information;

Name	Opt.	Type	Format	Description
setDisplay		E	N/A	Update the display
template		A	string	Relating display template
textField		E		Region to display text within
region	N	A	string	Name of region in template
align	Y	A	ENUMERATION(string): left | right | center	position for horizontal alignment
valign	Y	A	ENUMERATION(string): top | middle | bottom	Position for vertical alignment
proportional	Y	A	Y | N	Show text proportionally within the region
scrollInterval	Y	A	NonNegativeInteger	Speed of scrolling Text (milliseconds)
scrollSpace	Y	A	NonNegativeInteger	Number of characters
scrollUsed	Y	A	Boolean	Set this to true if ypu want to scroll.
alternateDuration	Y	A	NonNegativeInteger	Alternate Text Duration in Milliseconds
flashWithInterval	Y	A	NonNegativeInteger	Flashes if this param is used. Flash interval in milliseconds.
fontName	Y	A	string	Name of font
fontSize	Y	A	NonNegativeInteger	Size of font
autoResize	Y	A	ENUMERATION(string): false | up | down	Used if the font size should be changed to fit the region.
bold	Y	A	Boolean	Bold
italic	Y	A	Boolean	Italic
underline	Y	A	Boolean	Underline
graphic		E	string	Display grapic object

region		A	string	Region to display graphic within
name		A	string	Name of Image
scalePixelWidth	Y	A	NonNegativeInteger	Scale to Width (pixels)
scalePixelHeight	Y	A	NonNegativeInteger	Scale to Height (pixels)
speech			string	Text that should be read.
volume	Y	A	NonNegativeInteger	Adjust the volume level [0-10].
dataContent			ELEMENT	
contentType	N	A	string	For example "speech".
dataRecordIndex	N	A	positiveInteger	When displaying several records of information on the same display device, this number can be used to separate the records from each other.
time		E	N/A	Display current time
format	N	A	string	Sets format of time (for example: HH:MM:SS)
date		E	N/A	Display current date
format	N	A	string	Sets format of date (for example: CCYY-MM-DD)
countDown		E		
endTime	N	A	dateTime	XSD predefined datatype

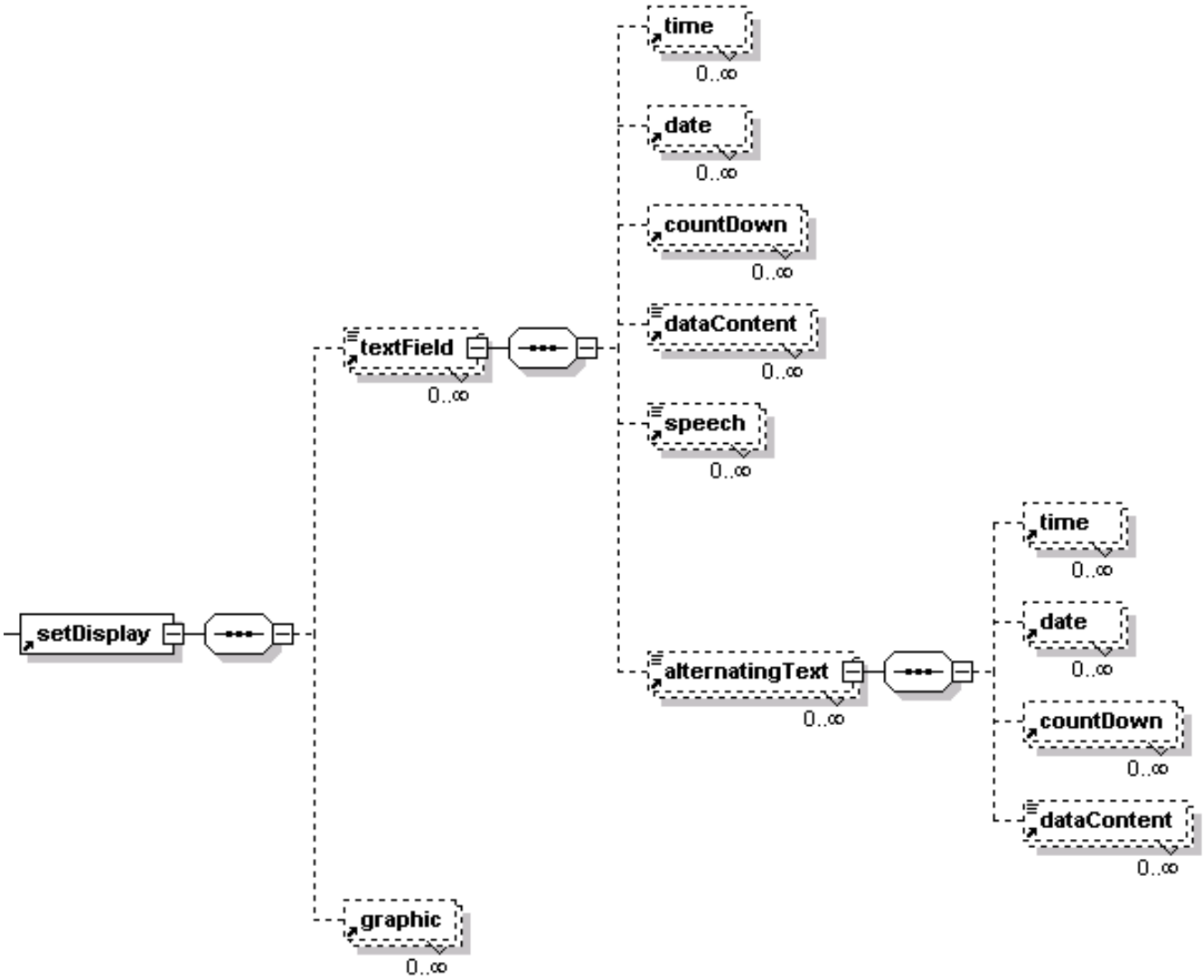

Sample setDisplay Request message

```
<displayMLRequest xmlns="http://www.peek.se/DisplayML/" version="1.12"
   dateTime="2001-12-17T09:30:47">
      <setDisplay template="template1">
            <graphic region="topRight" name="Icon1.pcx"/>
            <graphic region="topLeft" name="Icon2.pcx"/>
            <textField region="centerLeft" bold="true">Departure:</textField>
            <textField region="centerCenter">
               <countDown format="m" endTime="2003-04-04T00:02:00"
                  unitText="minutes" stopText="Now!"/>
            </textField>
            <textField region="time">
               <time format="hh:mm:ss"/>
            </textField>
            <textField region="date">
               <date format="ccyy-mm-dd"/>
            </textField>
            <textField region="topLeft">
               <alternatingText ID="1" alternatingDuration="1000">Text message1
               </alternatingText>
```

```
                <alternatingText ID="2" alternatingDuration="1000">Text message2
                </alternatingText>
            </textField>
        </setDisplay>
</displayMLRequest>
```

4.6.2 SetDisplayResponse

The ‘setDisplay’ response message will consist of the following information;

Name	Opt.	Type	Format	Description
setDisplayResponse		E	ELEMENT	Main Element
faults		E	ELEMENT	Faults Element. Sent if error occured.
OK		E	ELEMENT	Sent if no error occured.

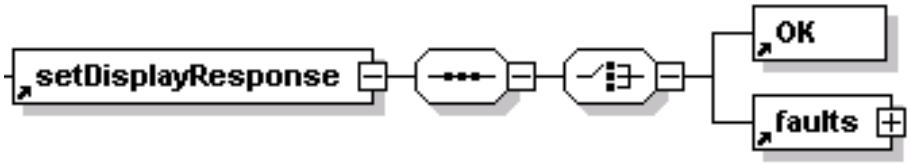

Sample fileTransferResponse message

```
<displayMLResponse version="1.12" xmlns=http://www.peek.se/DisplayML/
   dateTime="2003-10-10T13:13:08">
      <fileTransferResponse>
         <OK/>
      </ fileTransferResponse >
</displayMLResponse>
```

4.7 Set Parameters message

The “SetParameters” message is used to update configuration parameters within the display device.

The message will be sent from the controller to the display device when configuration details are to be updated

4.7.1 setParameters

The setParameters message will consist of the following information;

Name	Opt.	Type	Format	Description
setParameters		E	ELEMENT	Main Element
parameter		E	ELEMENT	Parameter Information
name		E	string	Parameter Name
value		E	string	Parameter Value

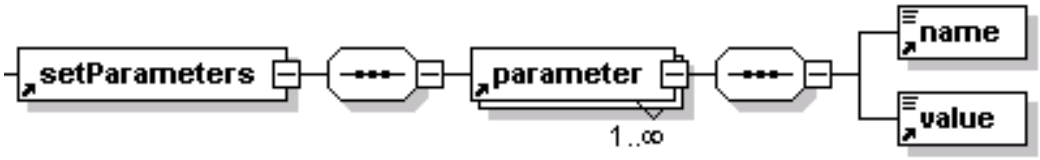

Possible Parameters (dependent on display device version)

Parameter Name	Description
Message timeout	Number of seconds before a message timeout event occurs (which will then display the No message text as described below).
No message text	Text message to be shown when no data has been received on the line during a specific amount of time. The text would typically be an indication that the communication is not working properly. An empty text means that the default text of the display is used (if such a text exists). To be sure that no message is shown, a <SPACE> character could be used as error text.
DefaultFontName	Default font to use (if not specified)
DefaultFontSize	Default font size to use (if not specified)

Other parameters will be dependent on the capability of the display device.

Sample ‘setParameters’ Request Message

```
<displayMLRequest xmlns="http://www.peek.se/DisplayML/" version="1.12"
   dateTime="2001-12-17T09:30:47-05:00">
      <setParameters>
         <parameter>
            <name>messageTimeout</name>
            <value>90</value>
         </parameter>
         <parameter>
            <name>noMessageText</name>
            <value>No Information Available</value>
         </parameter>
      </setParameters>
</displayMLRequest>
```

4.7.2 setParametersResponse

The setParametersResponse message will consist of the following information;

Name	Opt.	Type	Format	Description
setParametersResponse		E	ELEMENT	Main Element
OK		E	E	If no error occurred.
faults		E	ELEMENT	If error occurred.

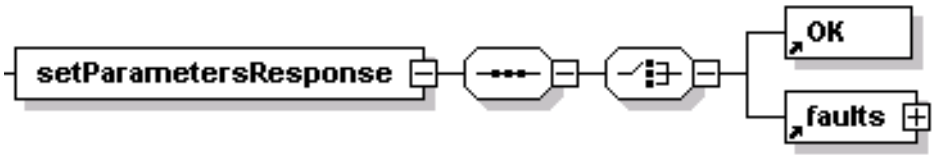

Sample 'SetParameterResponse' Response Message

```
<displayMLResponse xmlns="http://www.peek.se/DisplayML/" version="1.12"
   dateTime="2001-12-17T09:30:47-05:00">
      <setParametersResponse>
         <OK/>
      </setParametersResponse>
</displayMLResponse>
```

4.8 Template transfer Message Layout

4.8.1 Overview

Templates are used to define specific layouts for display devices. The templates are stored on the device and then re-used. This reduces the requirement to continually send the display format to the device each time information is to be displayed.

4.8.2 templateTransfer

The message will consist of the following information;

Name	Opt.	Type	Format	Description
addTemplate		E	N/A	Main Element
xmlns	N	A	string	Should always be http://www.peek.se/DisplayML/
version	N	A	decimal	The DisplayML protocol version
dateTime	N	A	dateTime CCYY-MM-DDThh:mm:ss	Message send time
deviceID	Y	A	string	Device Identifier
clientID	Y	A	string	Client Identifier (i.e. calling application or device)
name	N	A	string	Name of Template
clearAll	Y	A	Boolean – true | false	Clear display
region		E		Region Element
name	N	A	string	Name of Region
scale	Y	A	string enumeration - char | pixel	Scale – character or pixel
top	N	A	nonNegativeInteger	Top position
left	N	A	nonNegativeInteger	Left position
width	N	A	nonNegativeInteger	Width of Region
height	N	A	nonNegativeInteger	Height of Region
timeout	Y	A	nonNegativeInteger	Display for defined number of seconds
foreground	Y	A	string - #RRGGBB	Foreground color - Red,Green,Blue
foregroundImage	Y	A	string	Name of Foreground Image
background	Y	A	string - #RRGGBB	Background color - Red,Green,Blue
backgroundImage	Y	A	string	Name of Background Image
scrollInterval	Y	A	nonNegativeInteger	Speed of scrolling Text (milliseconds)
scrollSpace	Y	A	nonNegativeInteger	Space added to end of text when scrolling. Adds space between texts to prevent them to get to close.
alternateDuration	Y	A	nonNegativeInteger	Alternate Text Duration in Milliseconds
fontName	Y	A	string	Name of font to use (otherwise defaults to display font)
fontSize	Y	A	nonNegativeInteger	Size of font to use

				(otherwise defaults to display font)
removeTemplate		E		
name	N	A	string	The name of hte template to remove.
removeAllTemplates		E	N/A	Removes all templates in the device.

Important: removeTemplate and removeAllTemplates must always be done before addTemplate is done, if both are sent in the same message.

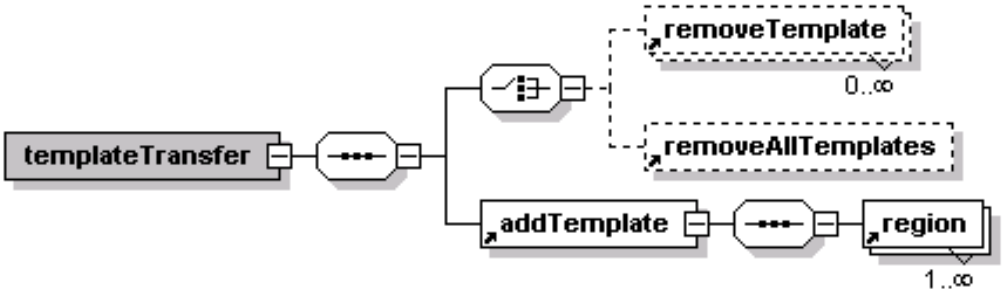

Sample 'templateTransfer' Request Message

```
<displayMLRequest xmlns="http://www.peek.se/DisplayML/" version="1.12"
   dateTime="2001-12-17T09:30:47">
      <templateTransfer>
         <removeTemplate name="templateAlpha"/>
         <addTemplate name="templateBeta">
            <region name="title" top="2" left="3" height="2" width="14" scale="char"/>
            <region name="center" top="5" left="5" height="5" width="20" scale="char"/>
         </addTemplate>
       </templateTransfer>
</displayMLRequest>
```

4.8.3 templateTransferResponse

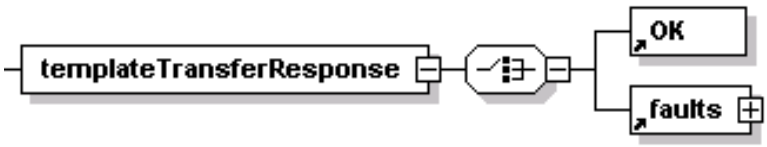

Sample 'templateTransferResponse' Response Message

```
<displayMLResponse xmlns="http://www.peek.se/DisplayML/" version="1.12"
   dateTime="2001-12-17T09:30:47-05:00">
      <templateTransferResponse>
         <OK/>
      </templateTransferResponse>
</displayMLResponse>
```